VCB SERIES

VOLTAGE	RATED CURRENT	BREAKING
12 · 24 kV	630 – 4000 A	20 – 50 kA

MEDIUM VOLTAGE INDOOR VACUUM CIRCUIT BREAKERS WITHDRAWABLE AND FIXED TYPE



according to

IEC 62271-100



About us

3B Energy can propose a huge number of products related to the energy sector. We are active in the whole world of Power Transmission and Distribution: Medium Voltage switchgears, Medium Voltage switches, Low Voltage PCs, Low Voltage MCCs with fixed and withdrawable units, Transformers, Cabinets. 3B Energy can propose a wide range of products for fulfilling any request and need.

3B Energy is very active and smart in assisting customers in finding solutions related to the energy sector. We can support the customer during the engineering phase of the plant, during the purchasing steps, for the supply and for after-sales services. 3B Energy is a real “turnkey” solution provider: Package Substations, Transformer Substations, Mobile Cabinets; we can propose a complete solution set, letting the customer have one player only for the whole plant.

3B Energy can propose a complete and detailed list of services covering each step of the engineering phase. Our technical staff is highly expert and professional and can support the customer starting from the base design of a single component up to a complete apparatus for electrical applications. We can design and engineer every component the customer may need — from a single contact to a complete switching device — and develop the technology for any product or application in the energy sector.



Contents

01 **Description** 4
General features, applications, design and standards

02 **VCB-12 Withdrawable** 5
12 kV · 630 – 4000 A · up to 50 kA

03 **VCB-12 Embedded Poles** 7
12 kV · 630 – 3150 A · up to 40 kA

04 **VCB-24 Withdrawable** 9
24 kV · 630 – 3150 A · up to 31.5 kA

05 **VCB-24 Embedded Poles** 11
24 kV · 630 – 3150 A · up to 31.5 kA

06 **Selection Guide** 12
VCB range at a glance and ordering

07 **VCB Bases** 13
Customisable bases for VCB 12 kV and 24 kV

VCB SERIES

GENERAL

- VCB series indoor vacuum circuit breakers are three-phase, 50 Hz medium-voltage switching devices for rated voltages of 12 kV and 24 kV.
- They are used to protect and control electrical equipment in power distribution systems.
- Operating mechanism and breaker body are combined in one compact, integrated unit with front mechanism and rear poles.
- Spring-charged stored-energy operating mechanism, operable electrically (AC/DC) or manually, suitable for frequent operation.
- Available as withdrawable units on a truck chassis or for fixed installation.
- High breaking capability, long electrical life (class E2) and maintenance-free primary circuit.

APPLICATIONS

- Power plants and substations
- Industrial and mining enterprises
- Primary and secondary distribution networks
- Withdrawable metal-clad and fixed metal-enclosed switchgear panels

POLE DESIGN

- **Embedded poles** – the vacuum interrupter and main conducting parts are encapsulated in epoxy resin by APG process, protecting the insulation from moisture, dirt and condensation.
- **Insulating cylinder** – the vacuum interrupter is installed vertically inside an APG epoxy insulating housing, limiting dust accumulation and keeping a high insulation resistance in damp, hot or polluted environments.

SAFETY

- Reliable mechanical interlocking with the switchgear, meeting the “five-prevention” interlocking requirements
- Front-panel indication of breaker position (closed / open) and spring status (charged / discharged)
- Front-panel trip and close push-buttons and manual spring charging

STANDARDS

- IEC 62271-100 – High-voltage alternating-current circuit breakers
- GB 1984, JB 3855, DL/T 403 national standards



PRODUCT FAMILY

- VCB truck (circuit breaker handcart)
- Isolation truck
- Fuse truck
- Voltage transformer truck
- VCB bases with contact boxes

SERVICE CONDITIONS

Ambient temperature	a-10 ... +50 °C
Relative humidity	daily mean ≤ 95 % monthly mean ≤ 90 %
Saturated vapour pressure	daily mean ≤ 2.2 kPa monthly mean ≤ 1.8 kPa
Altitude	≤ 1000 m *
Seismic intensity	≤ 8 degrees

*Install in places free from fire, explosion hazard, heavy pollution, chemical corrosion and violent vibration. * Higher altitudes on request.*

VCB-12 Withdrawable

The VCB-12 indoor vacuum circuit breaker is the protection and control unit for 12 kV power grid equipment and industrial power installations. It fits withdrawable metal-clad and fixed metal-enclosed switchgear and is completed by the isolation truck, fuse truck and voltage transformer truck. The operating mechanism and breaker body share one integrated, compact design; the vertical insulating housing protects the vacuum interrupters against external influences. Fixed and withdrawable installation units meet the needs of different switchgear.



Technical data

Characteristic	Unit	VCB-12
Rated voltage	kV	12
Rated frequency	Hz	50
Rated insulation level		
- 1 min power frequency withstand voltage	kV	42
- Lightning impulse withstand voltage	kV peak	75
Rated current	A	630 · 1000 · 1250 · 1600 · 2000 · 2500 · 3150 · 4000
Rated short-circuit breaking current	kA	20 · 25 · 31.5 · 40 · 50
Rated short-time withstand current	kA	= rated short-circuit breaking current
Rated short-circuit making current	kA peak	50 · 63 · 80 · 100 · 125
Rated peak withstand current	kA peak	= rated short-circuit making current
Rated duration of short circuit	s	4
Number of short-circuit breaking operations		50 (30 at 40 kA)
Rated operating sequence		O – 0.3 s – CO – 180 s – CO O – 180 s – CO – 180 s – CO (above 40 kA)
Mechanical life	operations	10 000
Rated single capacitor bank breaking current *	A	630
Rated back-to-back capacitor bank breaking current *	A	400
Maximum DC component	%	50

Available ratings

Breaking / making	630	1000	1250	1600	2000	2500	3150	4000
20 kA / 50 kA peak	●	●	●					
25 kA / 63 kA peak	●	●	●	●				
31.5 kA / 80 kA peak		●	●	●	●	●		
40 kA / 100 kA peak			●	●	●	●	●	●
50 kA / 125 kA peak								●

** Capacitor bank breaking ratings available on request. At 4000 A the switchgear must be provided with forced-air cooling. Breaking current = short-time withstand current; making current = peak withstand current.*

Overall outline drawings

PHASE DISTANCE 275 mm

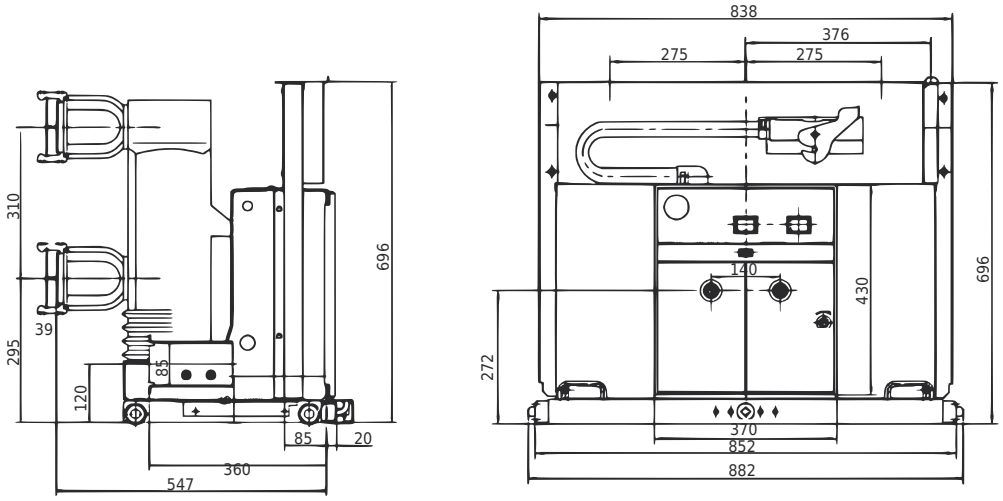

PHASE DISTANCE 210 mm

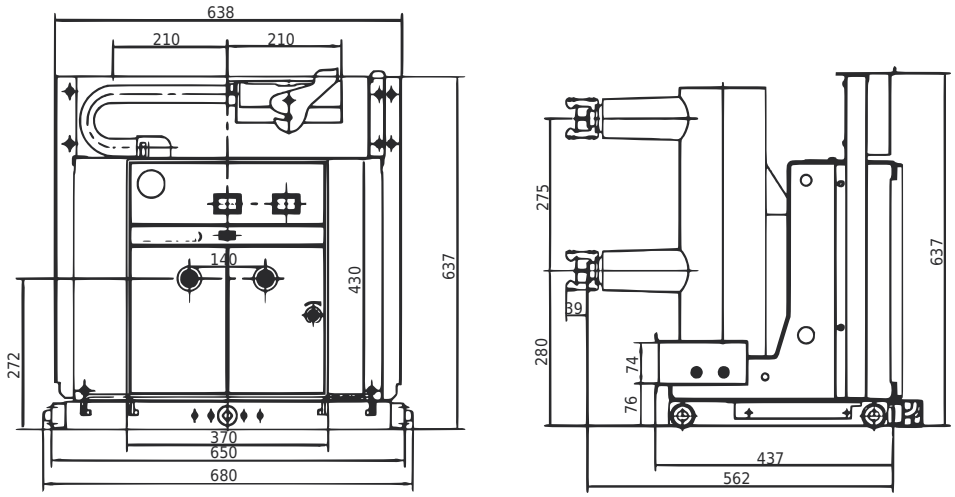

Dimensions in mm.

Ordering information

1. **VCB:** full type designation, rated current, rated short-circuit breaking current, distance between phases, rated voltage of closing/opening releases, rated voltage of the spring-charging motor, spare parts and quantities, special requirements.
2. **Isolation truck:** full type designation, rated current, distance between phases and quantity.
3. **Fuse truck:** full type designation, distance between phases, fuse type and rated current.
4. **Voltage transformer truck:** distance between phases, VT ratio, accuracy class, fuse type and rated current.

For special requirements please contact 3B Energy.

VCB-12 Embedded Poles

Three-phase 50 Hz indoor vacuum circuit breaker for 12 kV substations and industrial or mining distribution systems. Built with a reliable interlock function, it can be operated frequently at rated current and interrupt short-circuit and fault currents many times. Operating mechanism (front) and vacuum interrupters (rear) form one integrated unit, suitable for fixed installation or, with a chassis, for withdrawable switchgear.



TECHNICAL CHARACTERISTICS

- Embedded poles made by APG technology: the primary conducting part is encapsulated in epoxy resin, protecting the insulation from moisture, dirt and condensation.
- Vertically installed vacuum interrupter in an APG epoxy housing, minimising dust accumulation and keeping high insulation resistance in damp or polluted environments.
- Dedicated vacuum interrupter with strong breaking capability; electrical life type-tested at class E2 under auto-reclosing duty (274 short-circuit breaking operations).
- Maintenance-free primary part.

Available ratings

Breaking / making	630	1000	1250	1600	2000	2500	3150
20 kA / 50 kA peak	●	●	●				
25 kA / 63 kA peak	●	●	●				
31.5 kA / 80 kA peak		●	●	●	●		
40 kA / 100 kA peak						●	●

Technical data

Characteristic	Unit	VCB-12
Rated voltage	kV	12
1 min power frequency withstand voltage	kV	42
Lightning impulse withstand voltage (full wave)	kV peak	75
Short-circuit breaking operations		50 (30 at 40 kA)
Rated operating sequence		O – 0.3 s – CO – 180 s – CO O – 180 s – CO – 180 s – CO (40 kA)
Mechanical endurance	operations	10 000
Rated-current breaking operations	operations	20 000
Distance between phases	mm	150 · 210 · 275
DC component	%	50

Mechanical characteristics

Characteristic	Unit	VCB-12
Contact stroke	mm	9 ± 1
Contact over-travel	mm	3.5 ± 0.5
Average closing speed	m/s	0.4 – 0.8
Average opening speed	m/s	0.9 – 1.2
Contact bounce time at closing	ms	≤ 2
Three-phase closing asynchronism	ms	≤ 2
Closing time	ms	30 – 70
Opening time	ms	20 – 50

Overall outline drawings

PHASE DISTANCE 210 mm

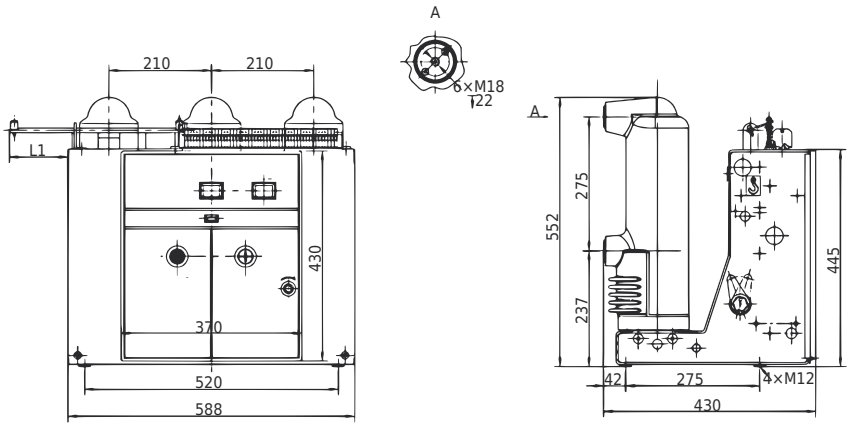

PHASE DISTANCE 150 mm

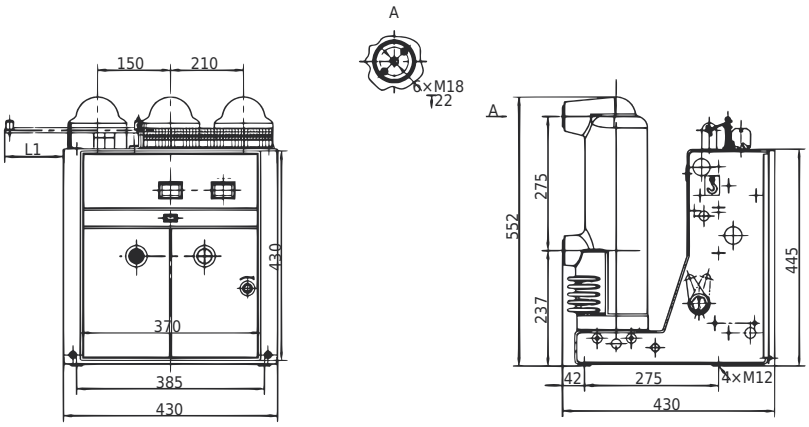

Dimensions in mm. Fixing: 4 × M12 mounting holes.

Ordering information

Full type designation, main technical data, distance between phases and quantity · type and rated voltage of the auxiliary supply · name and quantity of spare parts.

VCB-24 Withdrawable

Three-phase 50 Hz indoor power distribution equipment with a rated voltage of 24 kV, used to protect and control electrical equipment in industrial and mining enterprises, power plants and substations. The breaker complies with IEC standards and reaches class M2-E2-C2.



DESIGN

- Composite insulation with vacuum interrupters inside epoxy insulating cylinders.
- Spring-charged operating mechanism with push-rod transmission: small volume, compact design and reliable operation.
- Easy matching with the switchgear, meeting the “five-prevention” interlocking requirements.
- Suitable for withdrawable metal-clad switchgear; the range includes VCB truck, isolation truck and fuse truck.

Technical data

Characteristic	Unit	VCB-24
Rated voltage	kV	24
Rated current	A	630 · 1250 · 1600 · 2000 · 2500 · 3150
Rated frequency	Hz	50
Rated short-circuit breaking current	kA	20 · 25 · 31.5
Rated short-circuit making current	kA peak	50 · 63 · 80
Rated short-time withstand current	kA	20 · 25 · 31.5
Rated peak withstand current	kA peak	50 · 63 · 80
1 min power frequency withstand voltage	kV	65
Lightning impulse withstand voltage	kV peak	125
Rated duration of short circuit	s	4
Rated operating sequence		O – 0.3 s – CO – 180 s – CO
Maximum DC component	%	50

Available ratings

Breaking / making	630	1250	1600	2000	2500	3150
20 kA / 50 kA peak	●	●	●			
25 kA / 63 kA peak	●	●	●			
31.5 kA / 80 kA peak		●	●	●	●	●

Service conditions: see page 4.

Outline dimensions · 630 – 1600 A

FRAME 650 mm · 630 – 1600 A

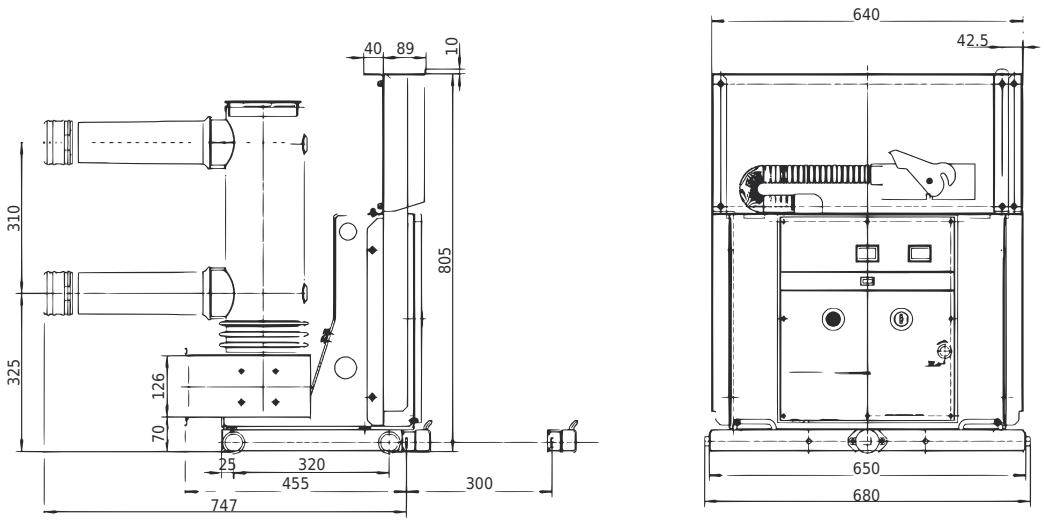

Rated current	A	630	1250	1600
Rated short-circuit breaking current	kA	20 · 25	20 · 25 · 31.5	20 · 25 · 31.5
Matched fixed contact diameter D	mm	Ø 35	Ø 49	Ø 55

Overlap between fixed and moving contacts not less than 15 mm; distance between phases 275 ± 1.5 mm.

Outline dimensions · 1600 – 3150 A

FRAME 838 mm · 1600 – 3150 A

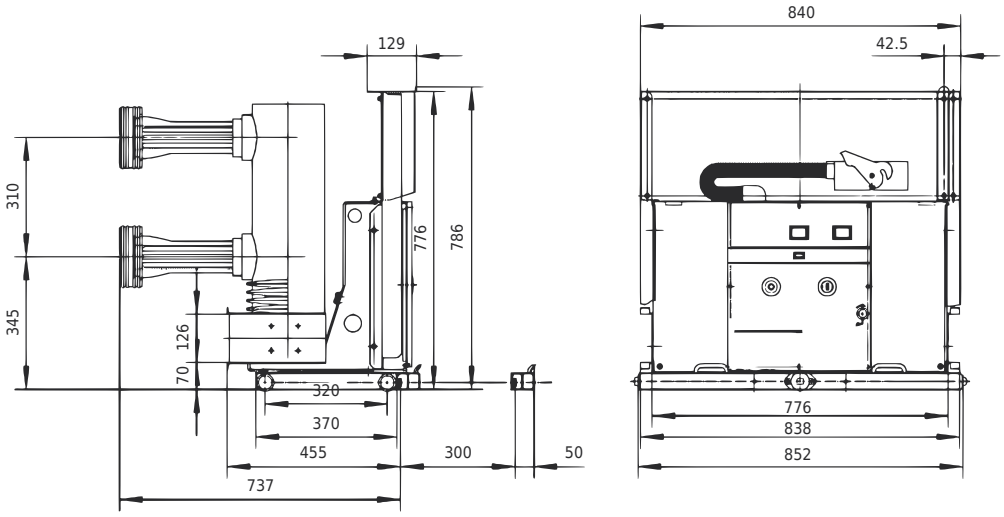

Rated current	A	1600	2000	2500	3150
Rated short-circuit breaking current	kA	31.5			

Dimensions in mm.

VCB-24 Embedded Poles

Three-phase 50 Hz indoor power distribution equipment with a rated voltage of 24 kV, used to protect and control electrical equipment in industrial and mining enterprises, power plants and substations. Suitable for switchgear such as withdrawable metal-clad panels and for fixed installation.



DESIGN

- Main conductive circuit with embedded poles and spring operating mechanism, greatly improving insulation, mechanical and breaking performance.
- Maintenance-free design with long mechanical and electrical life.
- Complies with national standards and IEC requirements; electrical endurance class E2, capacitive switching class C2.

Technical data

Characteristic	Unit	VCB-24
Rated voltage	kV	24
Rated current	A	630 · 1250 · 1600 · 2000 · 2500 · 3150
Rated frequency	Hz	50
Rated short-circuit breaking current	kA	20 · 25 · 31.5
Rated short-circuit making current	kA peak	50 · 63 · 80
Rated short-time withstand current	kA	20 · 25 · 31.5
Rated peak withstand current	kA peak	50 · 63 · 80
1 min power frequency withstand voltage	kV	65
Lightning impulse withstand voltage	kV peak	125
Rated duration of short circuit	s	4
Rated operating sequence		O – 0.3 s – CO – 180 s – CO
Maximum DC component	%	50

Rated current / breaking current combinations on request. Service conditions: see page 4.

Overall outline dimensions

FRAME 838 mm

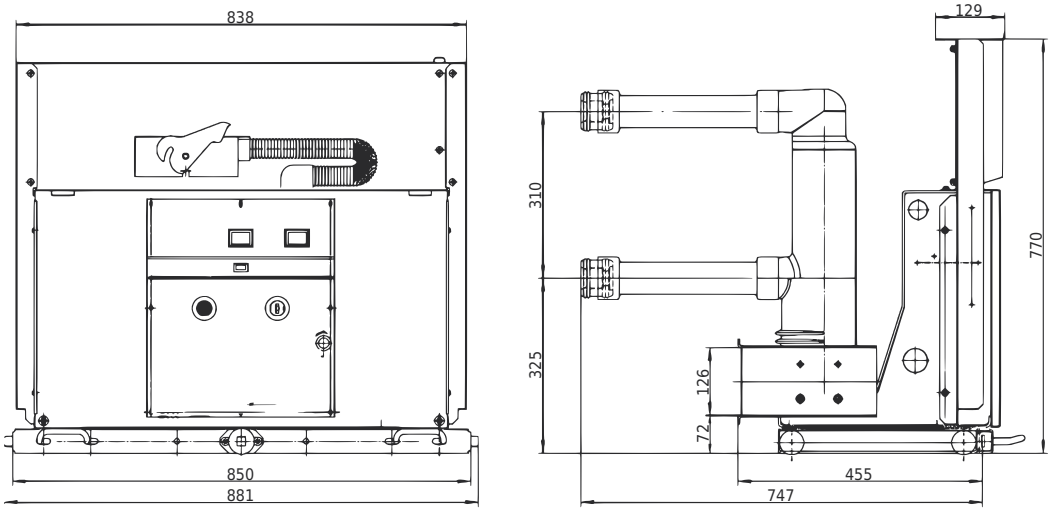

Dimensions in mm.

VCB range at a glance

Type	kV	Rated current [A]	Breaking [kA]	Pole design
VCB-12 Withdrawable	12	630 – 4000	20 – 50	Withdrawable
VCB-12 Embedded Poles	12	630 – 3150	20 – 40	Embedded pole
VCB-24 Withdrawable	24	630 – 3150	20 – 31.5	Withdrawable
VCB-24 Embedded Poles	24	630 – 3150	20 – 31.5	Embedded pole

Details on pages 5 – 11. Installation: withdrawable (truck) or fixed.

Common features

- Vacuum interruption with spring-charged stored-energy operating mechanism (electrical or manual charging).
- Front-panel position and spring-status indicators, trip / close push-buttons.
- Mechanical interlocking with the switchgear.
- Rated frequency 50 Hz; rated short-circuit duration 4 s; maximum DC component 50 %.

How to order

1. **Circuit breaker:** full type designation (VCB-12 / VCB-24, pole design, withdrawable or fixed), rated current, rated short-circuit breaking current, distance between phases and quantity.
2. **Auxiliary circuits:** type and rated voltage of closing / opening releases and of the spring-charging motor.
3. **Trucks:** isolation, fuse or voltage transformer truck with distance between phases, fuse type and rating, VT ratio and accuracy class.
4. **Accessories and spare parts:** name and quantity (e.g. VCB base with contact box, fixed contacts, operating handles).
5. **Special requirements:** altitude above 1000 m, special service conditions, customised versions.

VCB Bases with Contact Boxes for VCB 12 kV and 24 kV

The VCB base is the fixed part of the switchgear that receives the withdrawable VCB circuit breaker: it mounts, guides and supports the breaker truck and carries the epoxy contact boxes with the fixed contacts that connect the breaker to the busbar and cable compartments. Bases are available for both VCB-12 and VCB-24 breakers and are customised to the breaker rating, the distance between phases and the dimensions of the panel. Made of sturdy metal sheet, they combine mechanical strength, electrical insulation of the live parts and full interlocking with the breaker truck.

Characteristic	VCB-12 base	VCB-24 base
Rated voltage	12 kV	24 kV
Rated current / breaking current	according to breaker rating (reference version 1250 A – 31.5 kA)	according to breaker rating (630 – 3150 A, up to 31.5 kA)
Distance between phases	150 · 210 · 275 mm	275 mm
Fixed contacts	matched to rated current	matched to rated current
Overall dimensions W × D × H	on request	on request



Side view



Front view



Rear view with contact boxes

Characteristics

1. **Strength and stability** – the metal structure supports and secures the circuit breaker truck.
2. **Size matching** – design and dimensions follow the breaker type, rating and phase distance.
3. **Electrical insulation** – epoxy contact boxes insulate the live parts and prevent faults.
1. **Safety** – shutters and mechanical interlocks with breaker truck and earthing switch.
2. **Corrosion resistance** – coated sheet metal for stable long-term operation.
3. **Easy installation** – rational design that reduces panel assembly time and cost.

Note

Note

3B ENERGY S.r.l.

REGISTERED OFFICE

Via Villani, 2
26900 Lodi (LO) - Italy

Ph. +39 0371 1856259
Fax +39 0371 9568847

info@3b-energy.com

www.3b-energy.com