GREENWOOD POWER

PRODUCT GUIDE 2026

3B Energy

MADE IN EUROPE

VOLTAGE
0.72 – 36 kv

ACCURACY
UP TO 0.2S

STANDARDS
IEC · IEEE · ANSI

SENSORS FOR SMART GRID
SUPERIOR INNOVATIVE SENSOR SOLUTIONS
MV · LV · OUTDOOR · SYSTEM SOLUTIONS



IEC 61869-1 · -10 · -11 · IEEE · ANSI

www.3b-energy.com

PRODUCTS BY
GWP greenwood power



About us

Greenwood-Power (GWP) is the leading innovator for **non-conventional instrument transformers** and an innovative partner for every design at low and medium voltage level networks. Its compact, passive sensors turn high voltages and currents into small standardised signals that protection, control and metering devices process directly.

The products enable and promote the progressive transformation into **smart grids** with superior resilience, outstanding sustainability and excellent safety.

1.5 Mio+
Sensors in service worldwide

0.2S
Highest accuracy acc. IEC / IEEE / ANSI

96 %
Lower energy consumption than conventional transformers

IP67
Waterproof cone type voltage sensors

WB0–4
Wideband classes for power quality

ISO
9001 GWP GmbH & Kft · 14001 plant Bóly

WE STAND FOR

- High availability and fast delivery
- Reliability as a partner – we stand by our commitments
- High quality products and the best price-performance ratio in the market
- Short decision-making processes and extremely fast implementation
- Unique expertise in non-conventional instrument transformers

3B Energy is active in the whole world of power transmission and distribution and supports the customer through engineering, purchasing, supply and after-sales service. Together with Greenwood-Power, 3B Energy offers a complete range of sensors and accessories as a single partner for the whole plant.





Contents

01	**Background & Application** The challenge · the solution · application	4
02	**Voltage Sensors** Gas-insulated (Sensor 2.0) · air-insulated	6
03	**Cone Type Voltage Sensors – Sensor 2.0** U-series for T-connectors · types & compatibility	7
04	**Air-Insulated Voltage Sensors** V240L · V360L · V120LC	9
05	**Current Sensors** Overview · medium & low voltage application	10
06	**MV Ring Type Current Sensors** ExxxR · ExxxRB · ExxxRG · E050DA-33Y · ranges	12
07	**MV Split Type Current Sensors** ExxxT · ExxxE · ranges	15
08	**Low Voltage Current Sensors** LxxxTE · LxxxRJ	17
09	**Outdoor Applications** Poles and overhead lines up to 24 kV	18
10	**System Application Bushing** CxxxR combined sensor for GIS	19
11	**Special Applications – Add-ons** Amplifiers · burden converter · adapters · connections	20
12	**Devices for Voltage & Current Sensors** IEDs, relays, RTUs and meters	22
13	**Switchgear Overview** RMU and switchgear fitted with GWP sensors	24
14	**Selection Guide** Range at a glance · how to order	25

BACKGROUND · CHALLENGE · SOLUTION

01 Sensors for the smart grid

The challenge. Over the years the power grid has grown larger and more versatile. Today it includes not only the original equipment but also cables, batteries and renewable sources like wind turbines and solar panels, placed anywhere on the grid. Customers generate their own electricity and feed it into the grid, so electricity **flows in two directions** and the output can change at any point. Measuring devices installed only on the generation side are no longer enough.

The solution. The grid must adapt to this new structure: measuring devices such as sensors must be installed at **medium and low voltage level**. They transform high voltages and currents into smaller signals that electronic smart devices can handle – for more effective and reliable smart grids, regulated by the law of supply and demand.

Sensors vs. conventional transformers

- **Smaller, lighter** and more flexible
- **Save important resources** thanks to the different design
- **96 % lower energy consumption** than conventional transformers
- A key component to turn existing grids into **efficient smart grids**

FROM GENERATION TO CONSUMER · BIDIRECTIONAL POWER FLOW

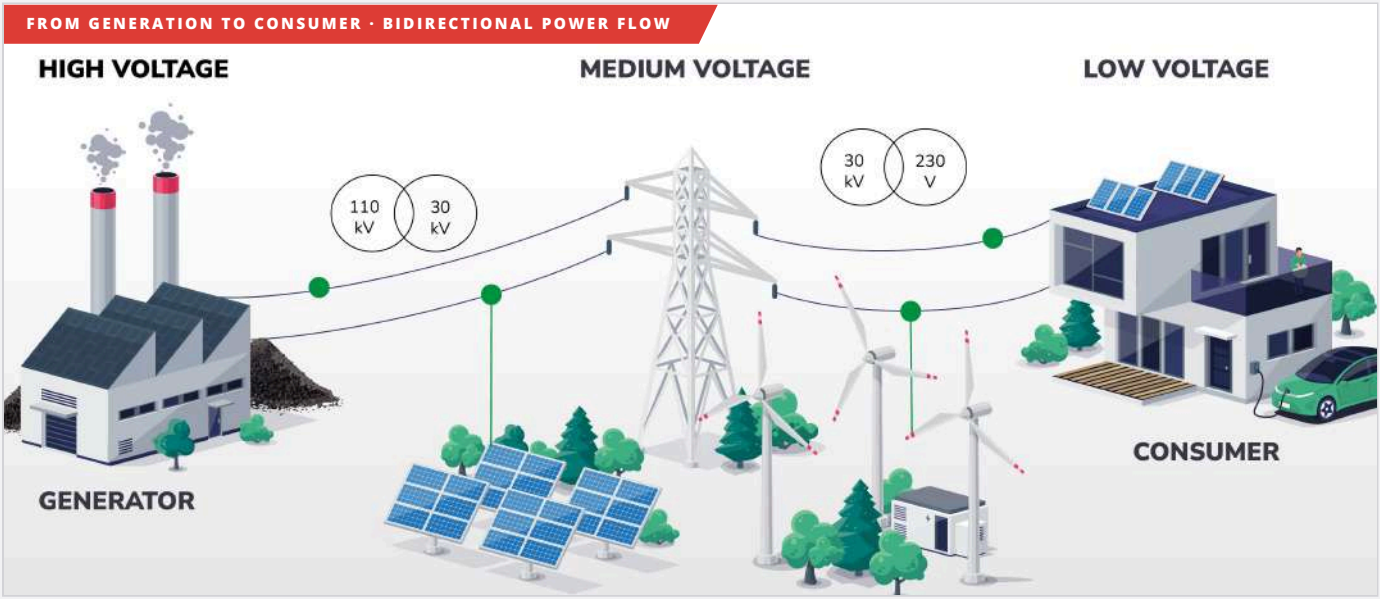

Greenwood Power has the best solutions – with its products GWP supplies a key component for the transformation of existing power grids into efficient smart grids.

APPLICATION

Grid stations in urban, rural and industrial areas

The main application is in **grid stations** in urban, rural and industrial areas. The sensors are used for **measuring, monitoring, protecting** and detecting short circuits or earth faults – including the direction of current flow during faults.

The compact sensors from Greenwood Power enable **quick and easy retrofitting** without the need for significant changes to the switchgear.

Analysis **Indication** **Automation** **Control** **Protection** **Billing**





Medium voltage and low voltage compartments of a secondary substation

MV
Voltage & current sensors for gas- and air-insulated switchgear

LV
Current sensors for NH-fuse switches and LV feeders

Retrofit
Split-core designs install around existing cables

Passive
no power supply needed

0.2S
highest accuracy

Wideband
WB0 – WB4 classes

IP67
waterproof

Compact
smallest size

GAS-INSULATED · AIR-INSULATED · ORIGINAL EQUIPMENT / RETROFIT

02 Voltage sensors at a glance



GAS-INSULATED SWITCHGEAR

Cone type sensors for T-connectors

The **Sensor 2.0 voltage sensors (U series)** are used instead of the blind plug in T-connectors of all common manufacturers. They secure the T-connector in place and measure the voltage at the same time. Dedicated designs are available for different types of T-connectors from **12 kV to 36 kV**. The sensor has a point for common earth connection and an output cable for connection with an intelligent electronic device (IED).

- **Passive components** – no need for power supplies
- **Compact form factors** for different T-connectors up to 36 kV
- **Robust design** – solid aluminium cap, IP67
- **Lowest partial discharge** levels
- **No correction factors** needed – plug & play
- Universal technical data for all types



AIR-INSULATED SWITCHGEAR

Support insulator sensors

The voltage sensors **V240L, V360L and V120LC** are for indoor air-insulated switchgear. V240L and V360L resist horizontal forces and can be used as an **insulated support for bus bars**, from which the voltage is measured. The sensor is secured at the opposite end by a single nut, which is also the connection to common earth; an output cable on the same end connects to the IED.

- **Passive components** – no need for power supplies
- **Easy installation** – single bolt on the bottom side
- **Supporting function** available
- **Wide temperature range**
- **No influence** of neighbouring electric fields
- Universal technical data

U-SERIES CONE TYPE VOLTAGE SENSORS · IEC 61869-11

03 Voltage sensors Sensor 2.0

U240C



Technical data	Value
Standards	IEC 61869-1, IEC 61869-11 · designed to HD 629.1:S3, table 16/17
Insulation level	12/28/75 kV up to 36/70/170 kV
Primary / nominal voltage	max. 22 kV/√3 (24 kV types) · max. 33 kV/√3 (36 kV types)
Secondary output	3.25/√3 V (IEC standard)
Accuracy class	0.2 / 0.5 / 1 & 3P/6P
Burden	100 kΩ – 2 GΩ, 0 – 1 nF · IEC standard: 2 MΩ / 50 pF
High frequency class	WB0 – WB4, up to class 0.5
Secondary connection	open ends, BNC or RJ45
Degree of protection	IP67

One design, every T-connector

Universal technical data for all U-series types: choose the sensor by the **T-connector already installed** – see the compatibility table on the next page.



U240B



U240JC



U240JK



U360C



U360JC

Examples of compatible devices: Satec, Siemens, SEL, Fanox ... see list on page 22. Examples of switchgears: see page 24.

VOLTAGE SENSORS TYPES AND T-CONNECTORS

Select the sensor by the T-connector in the field

Type	Cone	Insulation level [kV]	Total length hex nut → primary contact [mm]		Compatible T-connectors
			Standard	Low profile	
U240C	Type C acc. EN 50181, symmetric	12/28/75 24/50/125	**155**	147.5	Südkabel*: SEHDT 13.1, SEHDT 23 Nexans: 400TB/G, 440TB/G, K400TB/G, K440TB/G Prysmian: FMCT-400 · 3M: xx-EE-xxx series
U360C	Type C acc. EN 50181, symmetric	36/70/170	**180**	172.2	Südkabel*: SEHDT 36 · Nexans: M400TB/G, M440TB/G Prysmian*: FMCT-400 · 3M*: xx-EE-xxx series
U240B	Nexans type B (BIPA plug)	12/28/75 24/50/125	**162.5**	154.7	Nexans: 480TB/G, K480TB/G
U240JC	Cellpack CTS-S 630, long cone	12/28/75 24/50/125	**165.8**	158	Cellpack: CTS-S xxxA 24 kV
U360JC	Cellpack CTS-S 630, long cone	36/70/170	**190.5**	182.7	Cellpack: CTS-S (36 kV)
U240JK	Cellpack CTS 630, short cone	12/28/75 24/50/125	**174**	166	Cellpack: CTS xxxA 24 kV
VxxxK U240K from 2027	Shortened cone, asymmetric	12/28/75 24/50/125	**< 130**	–	Südkabel: SET 12/24, SAT 12/24 · Nexans: 430TB, K430TB nkt: CB24 · TE Connectivity/Raychem: RSTI-58xx 3M: xx-EE-xxx series

** Not yet tested at GWP.*



ADD-ON · NEXANS

KAA4 adapter

Enables easy installation of a voltage sensor **directly at the distribution transformer bushing**, between bushing and elbow connector. The GWP **U240C and U360C** sensors can be used together with the adapter.



Sensor 2.0 in place of the blind plug of a T-connector

BASE MOUNTED · WITH (V240L, V360L) / WITHOUT (V120LC) SUPPORTING FUNCTION

04 Voltage sensors V240L · V360L · V120LC



V240L · H 210 mm



V360L · H 300 mm



V120LC · H 130 mm

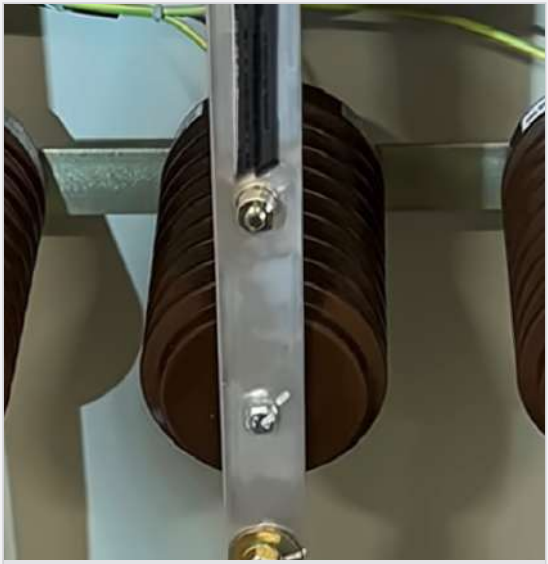

Support insulator sensors carrying the bus bars of an AIS panel

Technical data	Value
Insulation level	12/28/75 kV (V120LC) 24/50/125 kV (V240L) 36/70/170 kV (V360L)
Primary / nominal voltage	max. 11 kV/√3 (V120LC) 22 kV/√3 (V240L) · 33 kV/√3 (V360L)
Secondary output	3.25/√3 V (IEC standard)
Accuracy class	max. 0.2 & 3P/6P
Burden	100 kΩ – 2 GΩ, 0 – 1 nF IEC standard: 2 MΩ / 50 pF
Secondary connection	open ends, BNC or RJ45
Height	V240L: 210 mm · V360L: 300 mm V120LC: 130 mm

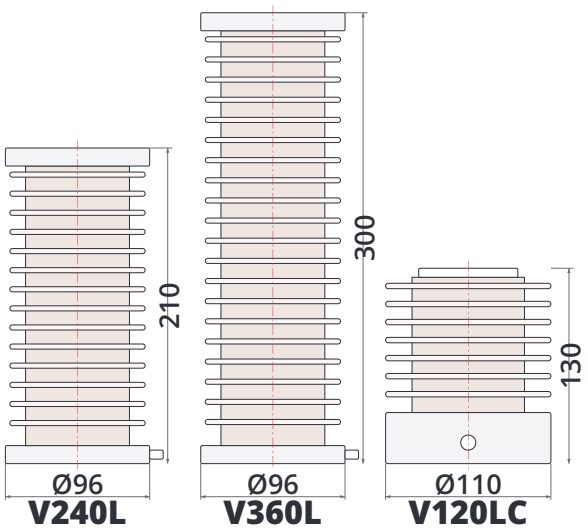

V240L · V360L · V120LC – technical drawing, dimensions in mm

IEC 61869-1 · IEC 61869-10 · FIRST INSTALLATION / RETROFIT

05 Current sensors at a glance

Ring types are installed on the bushings of GIS, RMU and pad-mounted transformers; split types close around existing screened cables **without disconnecting them**. Areas of application: **analysis, indication, automation, control, protection and billing**.

	Sensor type	Design	Application	Inner Ø [mm]	Mounting option / RMU / switchgear	Page
MEDIUM VOLTAGE · RING TYPE · FIRST INSTALLATION						
	**ExxxR** "One for all"	Ring type on bushings	Indoor	85	Siemens, Schneider Electric, Lucy Electric, Ormazabal ...	12
	**ExxxRB**	Ring type on bushings	Indoor	129	G&W, Hubbell, Eaton ...	12
	**ExxxRG**	Ring type on bushings, bolted	Indoor	84	G&W, Hubbell, Eaton ...	13
	**E050DA-33Y**	Ring type for 3-phase	Indoor	84 · pole dist. 95	Siemens 8DJH-Compact or equivalent	13
MEDIUM VOLTAGE · FLEXIBLE SPLIT TYPE · RETROFIT AROUND SCREENED CABLES						
	**ExxxT**	Split type, 1-phase	Retrofit · indoor	> 60	Siemens, Schneider Electric, Lucy Electric, Ormazabal ...	15
	**ExxxE**	Residual split type around 3-phase	Retrofit · indoor	> 160	Siemens, Schneider Electric, Lucy Electric, Ormazabal ...	15
LOW VOLTAGE · RETROFIT OR FIRST INSTALLATION						
	**LxxxRJ**	Ring type for NH-fuse switch	Retrofit · indoor	22	Hager / Jean Müller	17
	**LxxxTE**	Highly-flexible split type	Retrofit · indoor	> 40	LV feeder	17

Mounting options: see also the Switchgear Overview on page 24.

AREAS OF APPLICATION

Analysis · Indication · Automation · Control · Protection · Billing

MEDIUM VOLTAGE · IEC 61869-1, -10

Retrofit or first installation

These sensors are designed for installation on **cables on the primary side of AIS and GIS**, as well as on the **bushings of a GIS**. The split-core design allows for easy installation on existing cables; the cost-effective construction allows for an optimal price-benefit ratio.

- **Passive components** – no need for power supplies
- **Split core** – allows for retrofit installation
- **Easy installation** on bushings and cables



Ring type on bushings

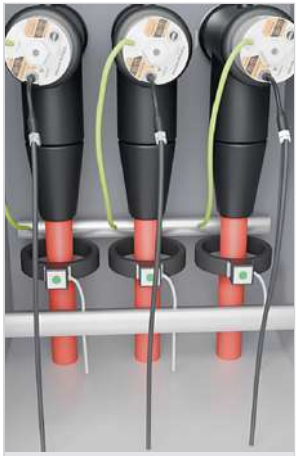

Split type on cables

LOW VOLTAGE · IEC 61869-1, -10

Sensors for LV applications

The **LxxxTE** (split type) was developed specifically for low voltage applications. The split-core design and small size give it the **flexibility of a Rogowski coil with the benefit of solid core accuracy**, ease of installation in switchgears on LV cables, and cost efficiency for any LV project.

- **Passive components** – no need for power supplies
- **Split core** – allows for retrofit installation
- **Wide temperature range**

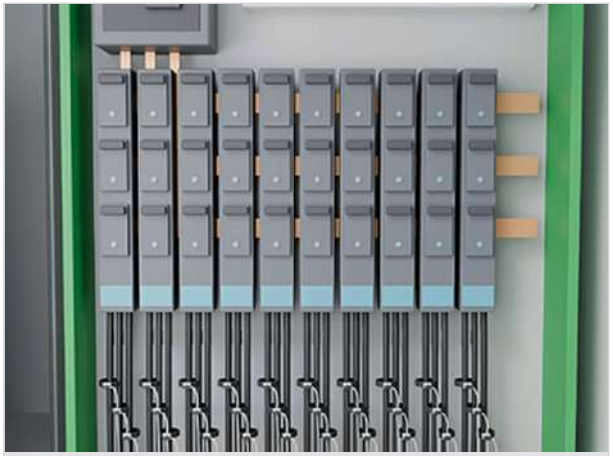

Split type sensors on low voltage feeders

MEDIUM VOLTAGE · INDOOR · ON BUSHINGS

06 Ring type current sensors



RING TYPE · INDOOR · "ONE FOR ALL"

ExxxR

Current sensor for installation on bushings – fits the bushings of the most common European RMUs.

Technical data	Value
Insulation level	0.72/3/- kV
Primary current	300 A standard (variants: see ranges table)
Secondary output	225 mV, 22.5 mV, 1 A (as I0xxR)
Accuracy class	variant dependent; 0.5 standard
Burden	≥ 10 kΩ
Application	through-hole, over bushing / T-connector
Inner diameter · height	85 mm · 30.5 mm

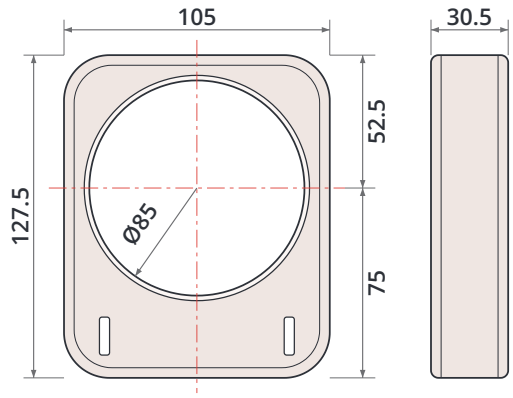

ExxxR · technical drawing, dimensions in mm



RING TYPE · INDOOR · NEW

ExxxRB

Current sensor for installation on bushings with large inner diameter, for North American style equipment.

Technical data	Value
Insulation level	0.72/3/- kV
Primary current	600 A standard
Secondary output	225 mV
Accuracy class	max. 0.2S
Protection class	5P10
Burden	≥ 10 kΩ
Application	through-hole, over bushing / T-connector
Inner diameter	129 mm

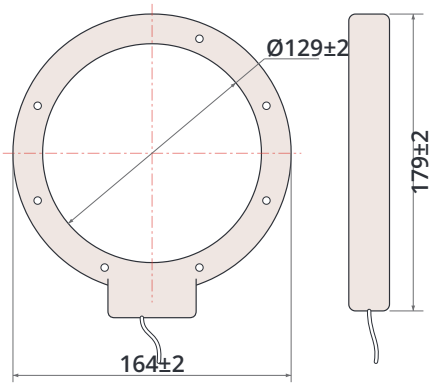

ExxxRB · technical drawing, dimensions in mm

Matching switchgears: see Switchgear Overview on page 24.



RING TYPE · INDOOR · BOLTED

ExxxRG

Current sensor for pre-mounted installation around bushings with bolts.

Technical data	Value
Insulation level	0.72/3/- kV
Primary current	equal to ExxxR (see ranges table)
Secondary output	225 mV standard
Accuracy class	max. 0.2S
Burden	≥ 10 kΩ
Application	pre-mounted around bushing via bolts
Inner diameter	84 mm

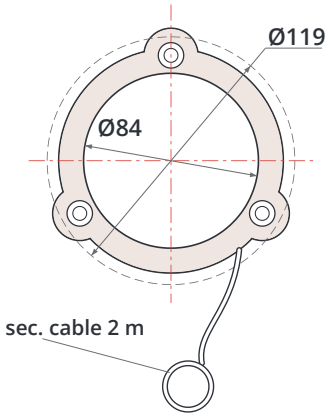

ExxxRG · technical drawing, dimensions in mm



RING TYPE · INDOOR · 3-PHASE

E050DA-33Y

Current sensor block for installation on the bushings of ultra-compact load break switches, 3-phase.

Technical data	Value
Insulation level	0.72/3/- kV
Primary current	500 A
Secondary output	225 mV
Accuracy class	0.2S
Protection class	5P20
Burden	≥ 10 kΩ
Application	on bushing in ultra-compact LBS
Inner diameter	84 mm · pole distance 95 mm

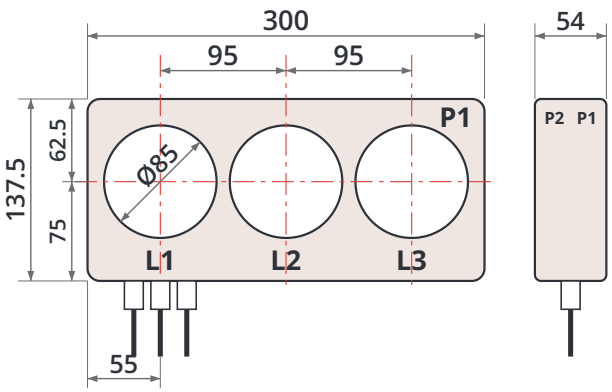

E050DA-33Y · technical drawing, dimensions in mm

Matching switchgears: see Switchgear Overview on page 24.

Ring Type Ranges

CURRENT SENSOR RANGES · RING TYPE EXXXR

225 mV and 22.5 mV series

Type	I pri [A]	U sec [mV]	max. Ext. [%]	5 %-Ext. [A]	max. Ampere	max. Class	FS	P Class	Order No.
225 mV SERIES									
E004R	40	225	400	2 – 160	1200	0.5	FS40	5P30	11831
E020R	200	225	300	10 – 600	2000	0.5S	FS15	5P10	12822
E030R	300	225	200	15 – 600	2400	0.5S / 0.2	FS10	5P8	11830
E060R	600	225	200	30 – 1200	3000	0.5S / 0.2	FS7	5P5	12448
E070R	700	225	200	35 – 1400	3500	0.5S / 0.2	FS7	5P5	11832
E080R	800	225	200	40 – 1600	4000	0.2S	FS7	5P5	11833
E100R	1000	225	120	50 – 1200	3500	0.2S	FS5	none	12430
22.5 mV SERIES									
E010R	100	22.5	1000	5 – 1000	3500	0.5	FS40	5P35	12428

CURRENT SENSOR RANGES · RING TYPE IXXXR

1 A classic CT series 1 VA – for relays with conventional 1 A inputs

Type	I pri [A]	I sec [A]	max. Ext. [%]	5 %-Ext. [A]	max. Ampere	max. Class	FS	P Class	Order No.
I020R	200	1	120	10 – 240	240	0.5	FS3	none	12823
I025R	250	1	150	12.5 – 375	375	0.5	FS5	none	12824
I030R	300	1	200	15 – 600	600	0.5	FS5	none	10067
I035R	350	1	200	17.5 – 700	800	0.5	FS5	none	12825
I040R	400	1	200	20 – 800	1000	0.5S	FS5	none	11109
I045R	450	1	200	22.5 – 900	1200	0.5S	FS5	none	12826
I050R	500	1	200	25 – 1000	1600	0.5S	FS5	none	12827
I055R	550	1	200	27.5 – 1100	2000	0.5S	FS5	none	12828
I060R	600	1	200	30 – 1200	2500	0.2 / 0.5S	FS5	none	11193
I063R	630	1	200	31.5 – 1260	3150	0.2 / 0.5S	FS6	5P5	12829

How to read the tables

max. Ext.: maximum extended current range in % of I pri · **5 %-Ext.**: range from 5 % to the maximum extended current · **max. Ampere**: maximum current the sensor withstands · **FS**: instrument security factor · **P Class**: protection class (e.g. 5P10 = 5 % composite error up to 10 × rated primary current) · **Order No.**: GWP article number.

MEDIUM VOLTAGE · INDOOR · RETROFIT AROUND CABLES

07 Split type current sensors



SPLIT TYPE · INDOOR · 1-PHASE

ExxxT

Current sensor for 1-phase retrofit installation around screened cables.

Technical data	Value
Insulation level	0.72/3/- kV
Primary current	standard 300 A (variants: see ranges table)
Secondary output	standard 225 mV (variants: see ranges table)
Accuracy class	max. 0.5
Protection class	special 5P20 series available up to 400 A
Burden	≥ 10 kΩ
Application	retrofit around cables (split type)
Inner diameter	> 60 mm

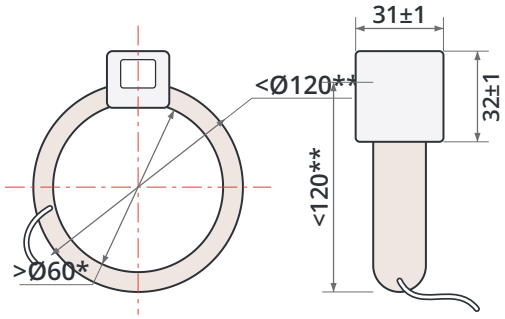

ExxxT · technical drawing, dimensions in mm



SPLIT TYPE · INDOOR · RESIDUAL CURRENT

ExxxE

Residual current sensor around three MV cables for retrofit installation and fault current measurement.

Technical data	Value
Insulation level	0.72/3/- kV
Primary current	60 A
Secondary output	225 mV
Accuracy class	3 standard; max. 0.5
Protection class	5P50
Burden	≥ 10 kΩ
Application	around three MV cables
Inner diameter	> 160 mm

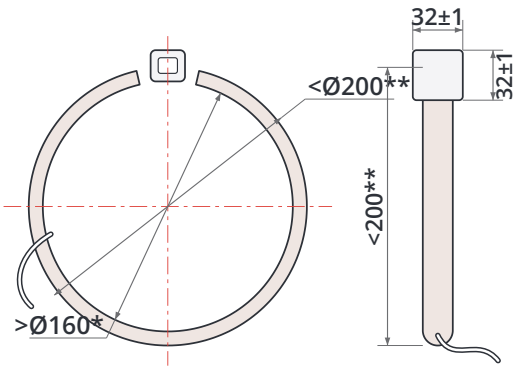

ExxxE · technical drawing, dimensions in mm

** Inner diameter at least 60 mm (ExxxT) / 160 mm (ExxxE) including zip tie. ** Outer diameter max. 120 mm (ExxxT) / 200 mm (ExxxE), measured at any angle. Clamp screw: optimal torque 1.0 Nm, max. 1.5 Nm. Matching switchgears: see Switchgear Overview on page 24.*

CURRENT SENSOR RANGES · SPLIT TYPE EXXXT

225 mV, 22.5 mV and 150 mV series

Type	I pri [A]	U sec [mV]	max. Ext. [%]	5 %-Ext. [A]	max. Ampere	max. Class	FS	P Class	Order No.
225 mV / 5P20 SERIES									
E001T	15	225	400	0.75 – 60	1050	0.5	FS85	5P70	12541
E003T	30	225	400	1.5 – 120	1800	0.5	FS75	5P60	12540
E005T	50	225	400	2.5 – 200	2500	0.5	FS65	5P50	12539
E006T	60	225	400	3 – 240	3000	0.5	FS60	5P50	12538
E007T	75	225	400	3.75 – 300	3750	0.5	FS55	5P50	12521
E010T	100	225	400	5 – 400	4000	0.5	FS47	5P40	12542
E015T	150	225	400	7.5 – 600	4500	0.5	FS40	5P30	12543
E020T	200	225	300	10 – 600	5000	0.5	FS30	5P25	12544
E030T	300	225	200	15 – 600	6000	0.5	FS22	5P20	12545
E040T	400	225	200	20 – 800	8000	0.5	FS24	5P20	12546
225 mV STANDARD SERIES									
E015T	150	225	400	7.5 – 600	2250	0.5	FS20	5P15	12519
E030T	300	225	200	15 – 600	3000	0.5	FS15	5P10	12408
E040T	400	225	200	20 – 800	6000	0.5	FS20	5P15	12566
E050T	500	225	200	25 – 1000	2500	0.5	FS10	5P5	12571
E060T	600	225	200	30 – 1200	3000	0.5	FS10	5P5	12409
E100T	1000	225	120	50 – 1200	5000	0.5	FS10	5P5	12580
E122T	1200	225	120	60 – 1440	6000	0.5	FS10	5P5	12581
22.5 mV SERIES									
E006T	60	22.5	400	3 – 240	6000	0.5	FS120	5P100	12457
E010T	100	22.5	400	5 – 400	7000	0.5	FS80	5P70	12580
E015T	150	22.5	400	7.5 – 600	7500	0.5	FS60	5P50	12588
E030T	300	22.5	200	15 – 600	4500	0.5	FS20	5P15	12366
E040T	400	22.5	300	20 – 1200	10000	0.5	FS30	5P25	12592
150 mV SERIES									
E015T	150	150	400	7.5 – 600	2250	0.5	FS20	5P15	12593

CURRENT SENSOR RANGES · SPLIT TYPE IXXXT

1 A classic CT series 1 VA

Type	I pri [A]	I sec [A]	max. Ext. [%]	5 %-Ext. [A]	max. Ampere	max. Class	FS	P Class	Order No.
I020T	200	1.0	120	10 – 240	600	1	FS4	–	12821
I030T	300	1.0	120	15 – 360	1200	1	FS4	–	11939
I040T	400	1.0	200	20 – 800	2000	1	FS7	5P5	10875
I050T	500	1.0	200	25 – 1000	2500	0.5	FS7	5P5	11940
I060T	600	1.0	200	30 – 1200	3000	0.5	FS8	5P5	10564

Class values are accuracy classes acc. IEC 61869 (Cl. 0.5 / Cl. 1). Order numbers as listed by Greenwood-Power.

LOW VOLTAGE · INDOOR · RETROFIT

08 Low voltage current sensors



SPLIT TYPE · INDOOR · NEW

LxxxTE

Highly-flexible low voltage current sensor for retrofit installation on low voltage feeders.

Technical data	Value
Insulation level	0.72/3/- kV
Primary current	300 A / 400 A
Secondary output	225 mV (300 A) / 333 mV (400 A)
Accuracy class	max. 0.5; standard 1
Instrument security	FS5
Burden	≥ 10 kΩ
Application	around cables or low voltage busbars
Inner diameter	> 40 mm

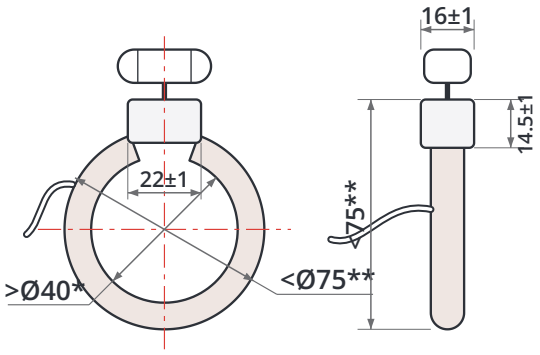

LxxxTE · technical drawing, dimensions in mm



RING TYPE · INDOOR · NH-FUSE SWITCH

LxxxRJ

Low voltage current sensor for NH-fuse switches (Hager / Jean Müller).

Technical data	Value
Insulation level	0.72/3/- kV
Primary current	400 A
Secondary output	225 mV
Accuracy class	0.5 & 5P5
Burden	≥ 10 kΩ
Inner diameter	22 mm

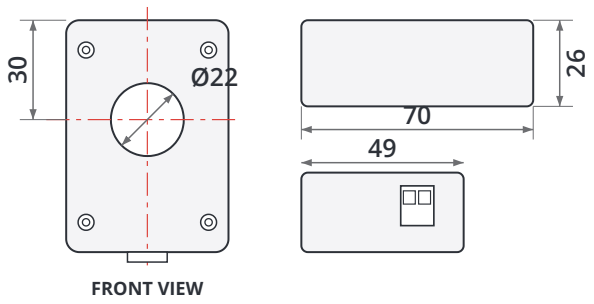

LxxxRJ · technical drawing, dimensions in mm

*LxxxTE: * inner diameter at least 40 mm; ** outer diameter max. 75 mm, measured at any angle (excluding butterfly screw).*

POLES AND OVERHEAD LINES · IEC & ANSI / IEEE

09 Modular outdoor sensors

All outdoor sensors are built in a **modular fashion**: they can be installed as a hanging device on a line or base mounted on a rail, as pure voltage, pure current or **combined sensor** up to 24 kV line voltage. The outside construction is made of **cycloaliphatic epoxy resin**, well known and proven in outdoor applications.

- **Modular system** for the best price-performance ratio
- **Long lifetime** – outdoor epoxy resin
- **Hanging or base mounted** versions
- **Highest stability** against harsh environmental conditions thanks to passive components
- **Flexibility** – each sensor can be pure voltage, pure current or combined



	Type	Description	Application	Insulation [kV]
VOLTAGE SENSORS				
	**V240FE**	Voltage sensor up to 24 kV	Rail mounted	**24/50/125**
	**V240FD**	Voltage sensor up to 24 kV	Hanging · hot plug	**24/50/125**
CURRENT SENSORS				
	**E240FG**	Current sensor up to 24 kV	Rail mounted	**24/50/125**
COSS – COMBINED OVERHEAD SENSOR SOLUTIONS				
	**C240FJ**	Combined voltage and current sensor up to 24 kV	Rail mounted	**24/50/125**

Technical data	Voltage · V240FE / V240FD	Current · E240FG	Combined · C240FJ
Insulation level	24/50/125 kV	24/50/125 kV	24/50/125 kV
Nominal voltage & current	max. 22 kV/√3	standard 600 A	max. 22 kV/√3
Secondary output	3.25 V/√3	225 mV	3.25 V/√3 standard / 225 mV
Accuracy	0.5 & 3P	0.5	voltage 0.5 & 3P / current 0.5
Burden	100 kΩ – 2 GΩ, 0 – 1 nF IEC standard 2 MΩ / 50 pF	> 10 kΩ	current > 10 kΩ · voltage as V240F
Application	V240FE rail mounted · V240FD hanging, directly on the overhead line	rail mounted	rail mounted

COMBINED VOLTAGE AND CURRENT MEASUREMENT ON BUSHINGS

10 System application CxxxR for GIS

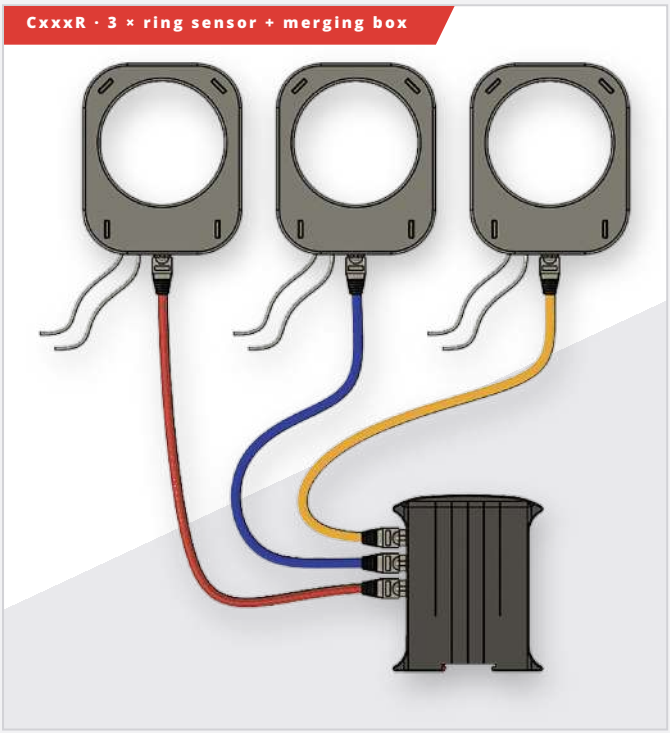

This **active, combined system** uses a special additional **capacitive tap at the bushing** to measure voltage. It adapts to any C-tap value inside the bushing and sets itself – in an automatic process at the factory of the GIS switchgear – to a preconfigured ratio with standard output 3.25 V/√3 acc. IEC 61869-11. No additional calibration is needed during operation.

The system **actively compensates temperature and neighbour fields**, reaching accuracy class 0.5, and is combined with 3 current sensors for a highly cost-efficient design.

PRODUCT ADVANTAGES

- Combined voltage and current measurement **directly at the bushing**
- Installed and connected to the IEDs at the **switchgear manufacturer** – no site installation of cone type sensors
- System **calibrates itself** during installation
- Output **not burden dependent**
- **Galvanic separation** through a capacitive divider
- **Hardware compensation** – no correction factors
- Acc. IEC 61869-1, -10, -11
- **Active temperature compensation** of the bushing C-tap

Technical data	Value
Insulation level	system max. 36/70/170 kV · product 0.72/3/- kV
Nominal voltage & current	voltage 33 kV/√3 · current 40 A / 80 A
Merging box output	voltage 3.25 V/√3 · current 225 mV
Accuracy	voltage 0.5 · current 0.5, max. 5P10
Burden	voltage ≥ 10 MΩ, < 75 pF · current ≥ 10 kΩ
Installation	indoor
Secondary connection	clamp terminals
Power supply	± 24 VDC

SPECIAL APPLICATIONS · ADD-ONS

11 Voltage amplifiers

Voltage amplifiers **combine sensor technology with IEDs that have conventional 100 – 120 V inputs**: the low-power signal is amplified with low power consumption, keeping a combined accuracy class of sensor and amplifier acc. IEC 61869.



VOLTAGE AMPLIFIER · ORION

V-Mate

For IEDs with 100 – 120 V input. Low power consumption · combined accuracy sensor + amplifier **up to 0.2**.

Technical data	
Aux. voltage	24 – 230 V AC/DC
Input voltage	3.25 V/√3
Output voltage	100 / 110 / 120 V/√3
Standard accuracy	0.2 or 0.5
With matched sensors	0.2
Load	0.5 VA per channel



VOLTAGE AMPLIFIER · KRIES

Capdis-4o + 4o HF

For IEDs with 100 V input. Low power consumption · combined accuracy sensor + amplifier **up to 0.5**.

Technical data	
Aux. voltage	24 – 230 V AC/DC
Input voltage	3.25 V/√3
Output voltage	100 V/√3
Standard accuracy	0.5
HF variant	0.3 / 3P
Load	0.5 VA per channel



VOLTAGE AMPLIFIER · ARTECHE

sensART VMAC

For IEDs with 100 – 120 V input. Low power consumption · combined accuracy sensor + amplifier **up to 0.5**.

Technical data	
Aux. voltage	48 – 125 VDC
Input voltage	3.25 V/√3
Output voltage	100 / 110 / 120 V/√3
Accuracy	0.5 – 1P
Load	0.4 VA per channel

Amplifier	Manufacturer	Output	Burden (power)	Accuracy
V-Mate	Orion	100 – 120 V	0.5 VA	0.2
Capdis-4o + Capdis 4o HF	Kries	100 V	0.5 VA	0.5
sensART VMAC	Arteche	100 – 120 V	0.4 VA	0.5



DEVICES · GREENWOOD POWER

Burden Converter H999AG-32AZ

Signal booster for chaining IEDs

- Very simple installation
- No effect on amplitude and phase correction
- Isolated power circuit
- Wide operating range

Technical data	
Input / output voltage	3 × 3.25 V/√3
Accuracy	0.1P @ RT
Input burden	2 MΩ // 20 pF
Max. output power	2 mVA
Power supply	12 – 48 VDC
Connection	open end – terminal blocks
Dimensions (H × W × D)	119 × 22.5 × 101 mm
Operating temperature	-25 °C to +55 °C

ADAPTERS · IEC 61869-6

Merging box and adapters



Merging Box GWP

Consolidates current and voltage measurements of each phase of a 3-phase system into one **RJ45 connector acc. IEC 61869-6**, for easy data transmission or monitoring.

RJ45 pinning · voltage a = 7, n = 8 · current S1 = 1, S2 = 2



Y-Adapter GWP

Combines two separate low-power signals or data connections into a single input.

RJ45 pinning · voltage a = 7, n = 8 · current S1 = 1, S2 = 2



LAN Splitter (2 to 1) GWP

Combines two Ethernet connections into a single output, allowing data from **two sensors to share one RJ45 cable**.



KAA4 Adapter Nexans

Voltage sensor installation **directly at the distribution transformer bushing**, between bushing and elbow connector. For U240C and U360C.

CONFIGURATIONS AND CONNECTIONS

Voltage & current sensors – output connection and standard cable length



Open end
wire ends for terminal blocks



RJ45
IEC 61869-6 low-power pinning



BNC
coaxial connector

Standard cable length

2 m | 3.7 m | 5 m | 10 m

SORTED BY MANUFACTURER · A TICK MARKS THE DEVICE CATEGORY

12 Devices for voltage and current sensors

	Manufacturer	Series	Type	Protection relay	Recloser controller	RTU / automation	Fault indicator	Measuring / PQ
	**A. Eberle**	EOR	EOR-1DS				✔	
		EOR	EOR-3D compact				✔	
		EOR	EOR-3DS				✔	
	**ABB**	Relion 615	RED615	✔				
		Relion 615	REF615	✔				
		Relion 615	REM615	✔				
		Relion 615	REX615	✔				
		Relion 620	REF620	✔				
		Relion 620	REM620	✔				
		Relion	REX600	✔				
〃		Relion	REX640	✔				
		Relion 620	RER620		✔			
		Relion 615	REC615			✔		
		–	RIO600			✔		
	**Fanox**	SIL	SIL-G	✔				
		SIL	SIL-S	✔				
		SIR	SIR-A		✔			
		SIR	SIR-C		✔			
		–	RNX-2000			✔		
	**Hitachi Energy**	RTU500	RTU530 + 530IMD02			✔		
	**Horstmann**	ComPass	B 2.0				✔	
		ComPass	Bs 2.0				✔	
		ComPass	D				✔	
	**Kries**	IKI	IKI-50_1F R2			✔	✔	
〃		IKI	IKI-50_2F R2e 1 %			✔	✔	
		IKI	IKI-55			✔	✔	
	**Lucy Electric**	Gemini	Gemini 3/4 + AMM			✔		
	**Netcontrol**	Netcon	Netcon 200			✔		
	**Ormazabal**	ekor	ekor.rci / ekor.rci-rtu	✔				

	Manufacturer	Series	Type	Protection relay	Recloser controller	RTU / automation	Fault indicator	Measuring / PQ
	**Power Standards Lab**	PQube	PQube					✔
	**SATEC**	EM	EM235					✔
		PM	PM335					✔
		BFM	BFM-II					✔
	**Schneider Electric**	Easergy P3	P3U30	✔				
		PowerLogic P5	P5F30	✔				
		PowerLogic P5	P5L30	✔				
		PowerLogic P5	P5M30	✔				
	**SEL**	SEL-700	SEL-751	✔				
		SEL-700	SEL-787L	✔				
		SEL-700	SEL-787-2, -3, -4	✔				
		SEL-700	SEL-710-5	✔				
		SEL-700	SEL-700G	✔				
		SEL-700	SEL-700BT	✔				
		SEL-400	SEL-451	✔				
		SEL-400	SEL-487E	✔				
		SEL-651R	SEL-651R		✔			
	**Siemens**	SIPROTEC Compact	7SJ81	✔				
〃		SIPROTEC Compact	7SK81	✔				
		SIPROTEC 5	7SY82	✔				
		–	A8000			✔		
		SICAM	FCM 6MD2321				✔	
		SICAM	FCM plus				✔	
	**Sprecher Automation**	SPRECON	SPRECON-EDIR	✔				
		SPRECON-E	AX330			✔		
	**Tesmec**	–	TP-PMRG	✔				
	**WAGO / Phoenix Contact**	–	750-49x / 2857 / EEM-MA					✔
	**ZIV**	–	Flexible RTU			✔		
		TCA	TCA-A			✔	✔	
〃		TCA	TCA-D / TCA-E			✔	✔	

Disclaimer: compatibility is largely assumed from the devices' published measuring inputs and has mostly not been tested by Greenwood Power. Please confirm suitability with the device manufacturer or with GWP before use. No liability is accepted; subject to change. Devices with two functions are ticked twice.

MATCHING SWITCHGEAR · ORIGINAL EQUIPMENT / RETROFIT

13 Overview switchgears

GWP sensors are installed in the ring main units and secondary switchgear of the main manufacturers – as original equipment at the switchgear factory or as retrofit in the field.

SIEMENS


8DJH


8DJH-COMPACT


8DJH36

SCHNEIDER ELECTRIC


RM6


FBX


RINGMASTER

DRIESCHER


MINEX


MINEX C


G.I.S.E.L.A

LUCY ELECTRIC


AEGIS PLUS


AEGIS 36 KV

ALFANAR


ALFA-R SF6 RMU UP TO 17.5 KV


ALFA-R SF6 RMU UP TO 36 KV

ABB


SAFERING


SAFEPLUS

EATON


XIRIA

ORMAZABAL


GA / GAE + GE

Your switchgear is not listed?

GWP sensors fit most RMUs and secondary switchgear on the market. Send us the switchgear type, bushing or cable data and we will propose the matching sensor – also **customer defined**.

GWP RANGE 2026

14 Range at a glance

Product family	Standard	Voltage / current	Secondary output	Max. class	Page
Cone type voltage sensors (Sensor 2.0)	IEC 61869-11 · EN 50181	12 – 36 kV	3.25/√3 V	0.2 · 3P/6P	7
Air-insulated voltage sensors	IEC 61869-11	12 – 36 kV	3.25/√3 V	0.2 · 3P/6P	9
MV ring type current sensors	IEC 61869-10	40 – 1000 A	225 / 22.5 mV · 1 A	0.2S · 5P35	12
MV split type current sensors	IEC 61869-10	15 – 1200 A	225 / 150 / 22.5 mV · 1 A	0.5 · 5P100	15
LV current sensors	IEC 61869-10	300 – 400 A	225 / 333 mV	0.5 · 5P5	17
Outdoor sensors	IEC · ANSI / IEEE	up to 24 kV · 600 A	3.25/√3 V · 225 mV	0.5 · 3P	18
System application CxxxR	IEC 61869-1, -10, -11	up to 36 kV	3.25/√3 V · 225 mV	0.5 · 5P10	19
Amplifiers, devices & adapters	IEC 61869-6	—	100 – 120 V · RJ45	up to 0.1P	20

Values are maximum ratings of the family; see the individual pages for each type. Ratios, outputs and connections are available customer defined.

COMMON FEATURES

- **Passive technology** – no auxiliary supply for the sensors
- Standard low-power outputs acc. **IEC 61869-10 / -11**
- **Wideband classes** WB0 – WB4 for power quality
- **96 % lower energy consumption** than conventional transformers
- **Compact** – ideal for retrofit without changes to the switchgear
- **Made in Europe** · ISO 9001 / ISO 14001

HOW TO ORDER

1. **Product:** family, type and GWP order number.
2. **Ratings:** insulation level, primary voltage / current, accuracy and protection class.
3. **Interface:** T-connector type or bushing / cable diameter.
4. **Secondary:** output signal, plug (open end, RJ45, BNC) and cable length.
5. **Quantity** and requested accessories (amplifiers, merging box, adapters).
6. **Special requirements:** customer-defined ratios, outputs, IED to be connected.

For product selection, datasheets and quotations please contact **3B Energy** · info@3b-energy.com · +39 0371 1856259

Notes

Notes

Notes

Notes

GREENWOOD POWER PRODUCTS

3B ENERGY S.r.l.

REGISTERED OFFICE

Via Villani, 2
26900 Lodi (LO) - Italy

Ph. +39 0371 1856259
Fax +39 0371 9568847

info@3b-energy.com

www.3b-energy.com



Data and illustrations are not binding. Specifications subject to change without notice. Product data: Greenwood-Power catalogue 2026.